WANNER™ HYDRA-CELL® PRO

Technical Bulletin TB0083

SUBJECT: Hydra-Cell Pro Upgrade

Pump Models Affected: D/G10, D/G12, P400, AND OTHER OEM CUSTOMS

Part Numbers Affected: K10-044-1010, K10-043-1010, K10-045-3110, K10-042-1010, K10-002-1020, D10-003-102X, K10-014-1210

WHAT IS HYDRA-CELL PRO?

Wanner™ Hydra-Cell® Pro pump models withstand transient closed/restricted inlet conditions, feature improved priming, and deliver increased low-speed volumetric efficiency and higher energy efficiency over non-Pro models.

For the D/G10 pump series, these changes are threefold:

- Dual Bias Spring: This patented technology provides the Hydra-Cell Pro piston with advanced diaphragm position control (ADPC). Utilizing two stages of bias pressure, it delivers improved hydraulic priming during normal operation while retaining the Kel-Cell's ability to survive restricted inlet conditions.
- Reduced Valve Pocket: Now standard to all pump configurations, the reduced pocket valve plate has a much better compression ratio. This reduces accumulation of solid particles and risk of vapor lock, as well as aiding in fluid-end priming for low speeds and lower flow cams.
- Grooveless Cylinders: Dual Bias Spring technology's priming ability has rendered the groove unnecessary. By removing the groove, almost no oil is able to slip past the piston on each stroke. This means efficiency improvements at all performance points, but especially at low speeds and at high pressures.

WHEN IS IT HAPPENING?

All new orders for D/G10 series pumps will be phased in as Hydra-Cell Pro beginning in February 2024.
The 5th digit in the order code will change from a "K" or "R" to a "P" within our product bulletins, price book, and catalog.

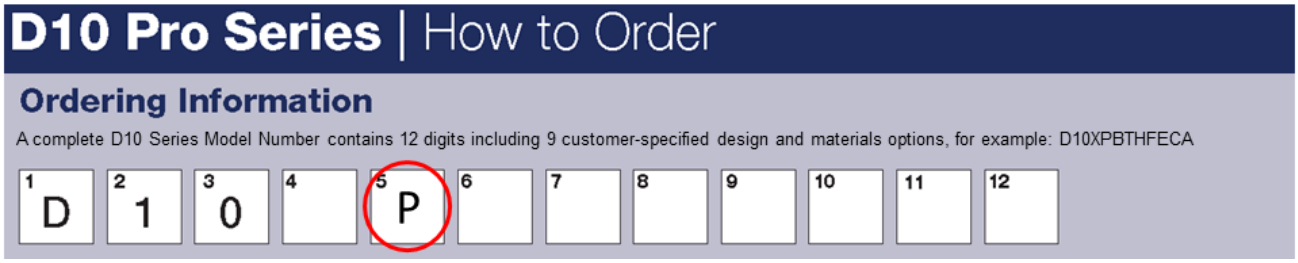

IS IT BACKWARDS COMPATIBLE?

Absolutely. A Hydra-Cell Pro piston can be installed into any existing D/G10 pump, and perform at least as well as the one it replaced. However, components within the piston assembly between a Hydra-Cell Pro piston, Kel-Cell, and 1st Generation Hydra-Cell (Non Kel-Cell) parts may not be compatible with each other, so it is strongly recommended to replace the entire piston assembly should any of those internal components need to be replaced.

A grooveless cylinder housing requires Hydra-Cell Pro pistons to function properly.

Reduced pocket valve plates may be used with previous generations of Hydra-Cell technology, but work best with Hydra-Cell Pro.

Additionally, the full suite of performance and efficiency improvements will not be realized until all Hydra-Cell Pro components are implemented- the reduced pocket valve plate, the grooveless cylinder housing, and all three Hydra-Cell Pro piston assemblies.

Our recommendation would be to order a Loaded Cylinder Housing (K10-002-125X) and a Reduced Pocket Valve Plate (D10-003-103X) ahead of your next regular maintenance cycle in order to upgrade the entire pump all at once.

WHAT PARTS ARE CHANGING?

Please reference the diagram below for what you can expect to see in a Hydra-Cell Pro D/G10 series pump.
This image shows the changes for a standard configuration. For OEM Custom pump numbers, contact your sales representative.

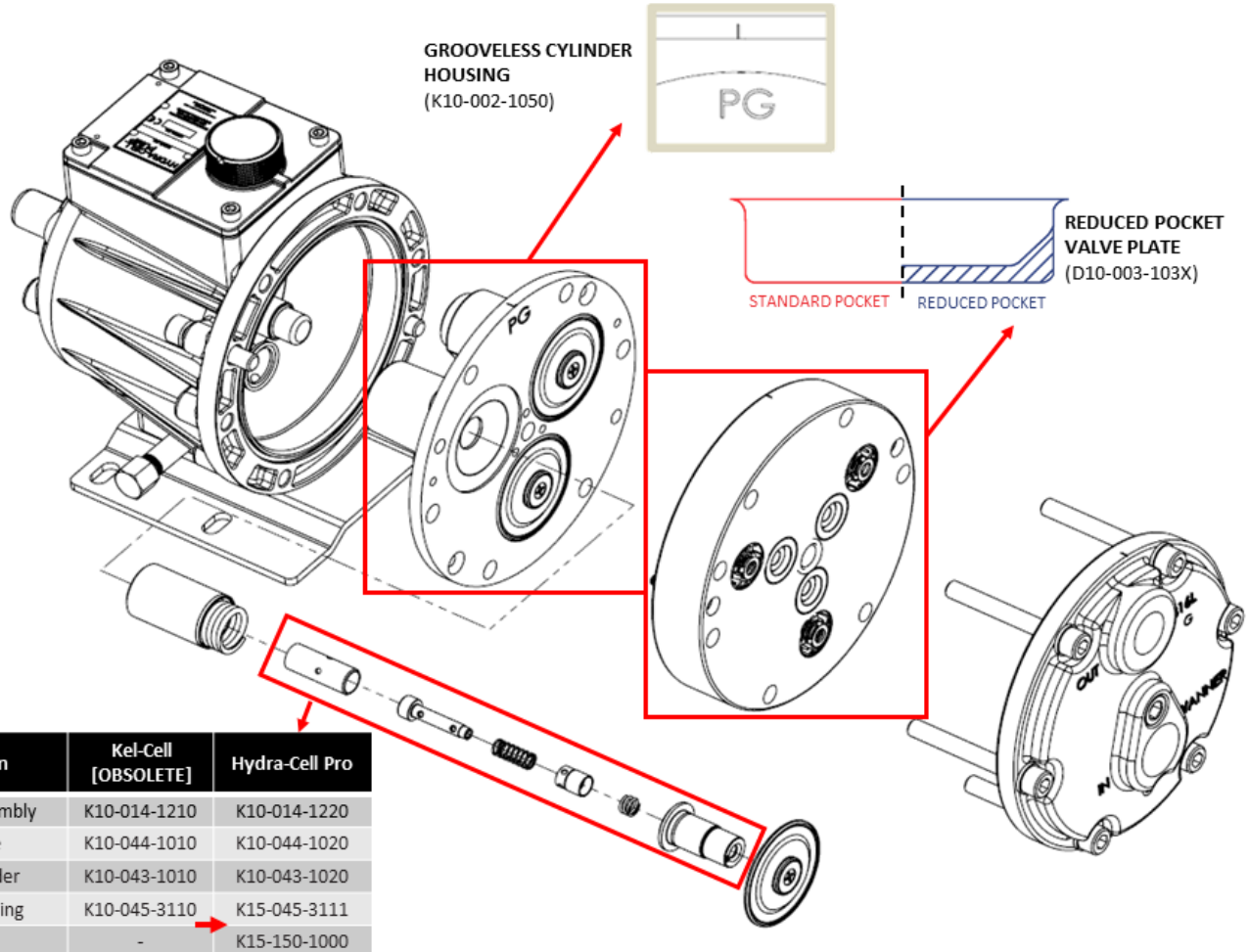

Description	Kel-Cell [OBSOLETE]	Hydra-Cell Pro
Piston Assembly	K10-014-1210	K10-014-1220
Spool Valve	K10-044-1010	K10-044-1020
Valve Cylinder	K10-043-1010	K10-043-1020
Priming Spring	K10-045-3110	K15-045-3111
Spacer	-	K15-150-1000
Overfill Spring	-	K15-045-3110
Spring Retainer	K10-042-1010	K15-042-1010

WANNER ENGINEERING, INC.
World Headquarters & Manufacturing

1204 Chestnut Avenue
Minneapolis, MN 55403 USA
t: 612-332-5681
f: 612-332-6937
e: sales@wannereng.com
Hydra-Cell.com

WANNER INTERNATIONAL, LTD.
EMEA / Australia

8 & 9, Fleet Business Park
Sandy Lane, Church Crookham
Hampshire GU52 8BF, England
t: +(44) 01252 816847
f: +(44) 01252 629242
e: support@wannerint.com
Hydra-Cell.co.uk

WANNER PUMPS, LTD.
Asia / Pacific

Flat A, 21/F
Chatham Commercial Building
399 Chatham Road North
Hunghom, Kowloon, Hong Kong
t: +(852) 3428-6534
f: +(852) 3188-9145
e: sales@wannerpumps.com
WannerPumps.com

WANNER INDIA PVT. LTD.
India

Mumbai, India
t: +91 (22) 22044766
e: support@wannerindia.com
WannerIndia.com

© 2024 Wanner Engineering, Inc.