DWG NO
P500-DIM-METAL-56C

REV.	DESCRIPTION	DATE	ECO	DWN
A	NEW RELEASE	05-30-06	E150	JJH

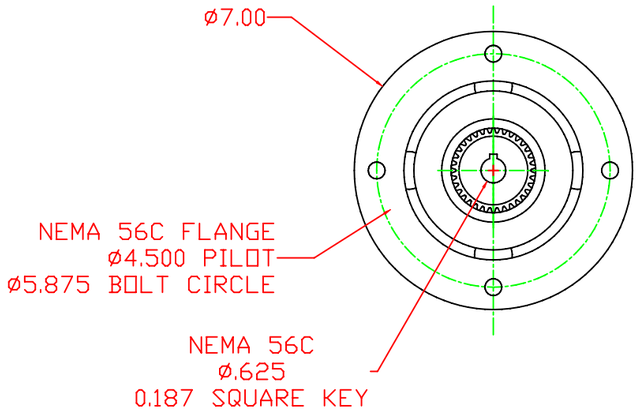

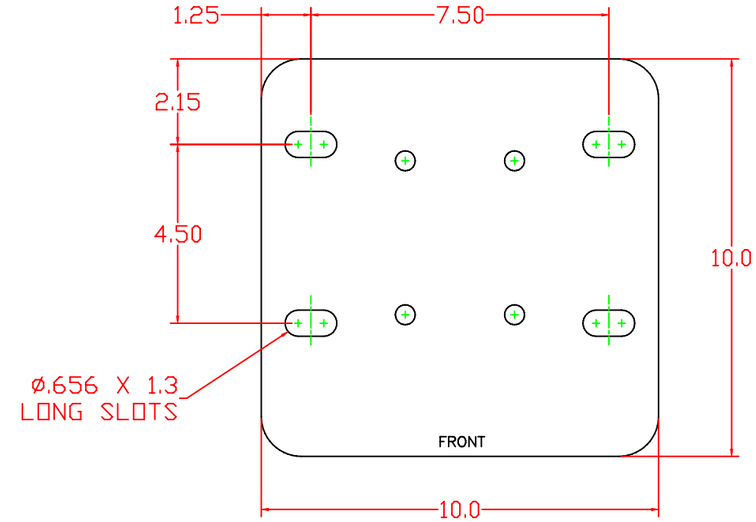

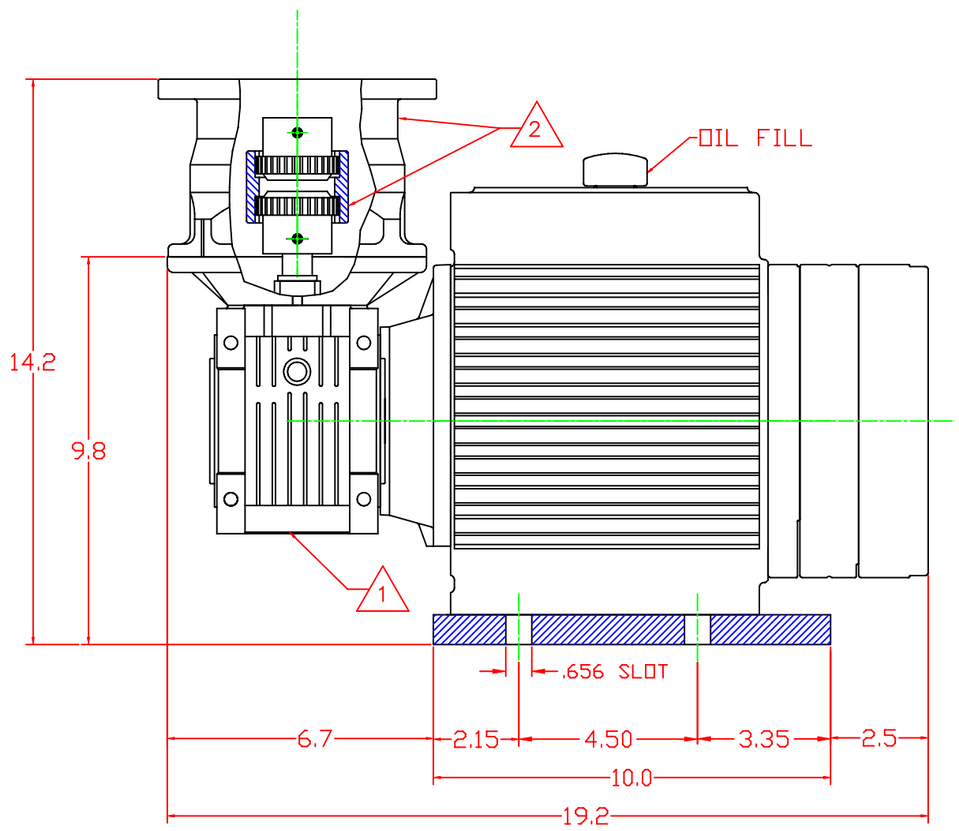

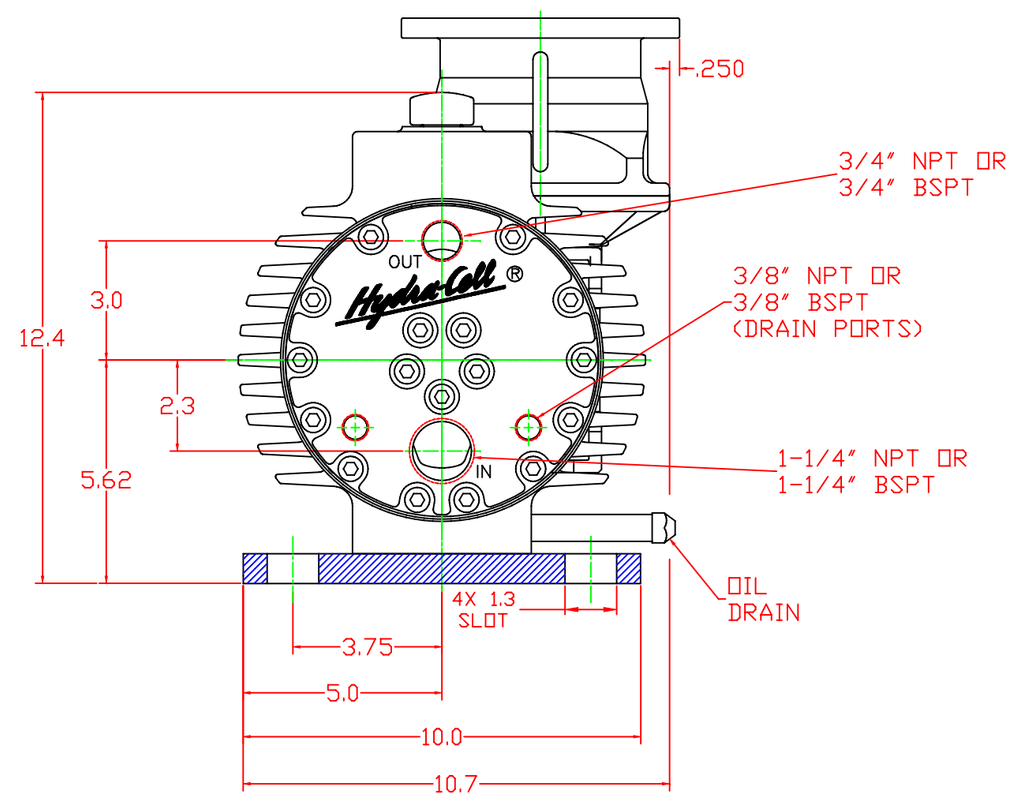

NOTES:

1. WORM GEAR REDUCER AVAILABLE IN THE FOLLOWING RATIO'S:
   - 7.5:1, 10:1, 15:1
2. MOTOR ADAPTER AND COUPLING REQUIRED FOR USE OF 56C MOTOR.
3. WEIGHT = 170 LBS (77 KG) – DOES NOT INCLUDE MOTOR.

UNLESS OTHERWISE SPECIFIED
- ALL DIMENSIONS ARE IN INCHES.
- DRAWING MAY NOT BE TO SCALE
- ALL DIMENSONS APPLY AFTER PLATING, COATING AND HEAT TREATING, BUT BEFORE PAINTING.
- REMOVE ALL BURRS, BREAK ALL SHARP EDGES AND CORNERS

PROPRIETARY STATEMENT
This document contains confidential and proprietary information and is not to be reproduced or the information contained therein disclosed to others without consent, in writing, from WANNER ENGINEERING INC.

TOL UNLESS NOTED			
.X = ± .020	DWN	05-30-06	JJH
.XX = ± .010	CHK'D		
.XXX = ± .005	APP'D		
ANGLES = ± .50°	USED ON:		
FINISH: 125 RMS	SHEET 1 OF 1		
	SCALE 1:2	FORM DBLK	

MAT'L PUMPING HEAD AVAILABLE IN 316 SST OR HASTELLOY C

WANNER ENGINEERING INC
1204 CHESTNUT AVE. MPLS, MN 55403

TITLE DIM DWG, P500, 56C
SIZE D
DWG NO P500-DIM-METAL-56C
REV. A